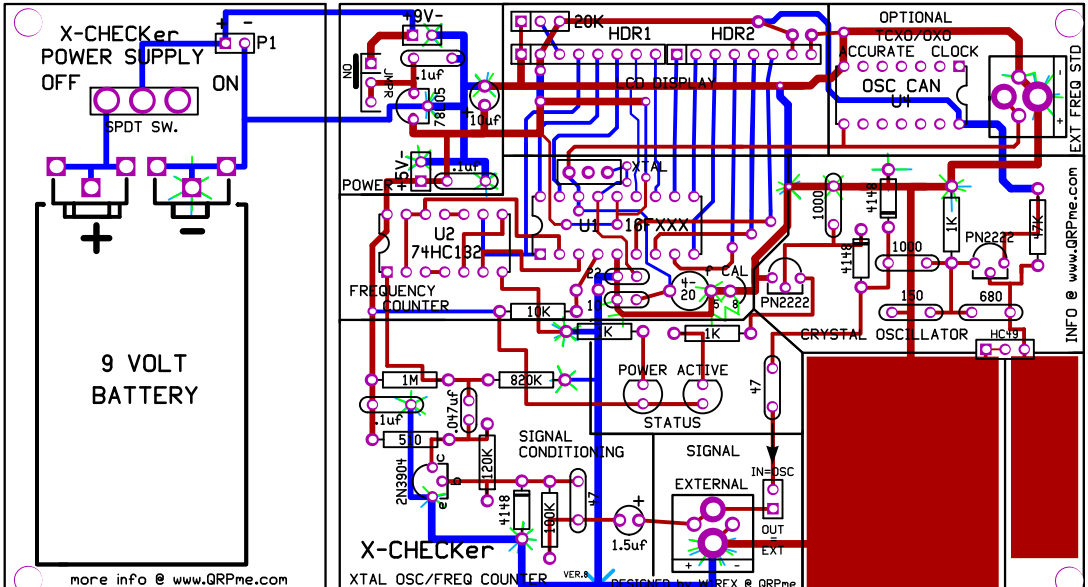
X-CHECKer
POWER SUPPLY
OFF
ON
SPDT SW.
P1
9 VOLT
BATTERY
more info @ www.QRPme.com
+9V-
.1uf
78L05
10uf
-9V-
POWER
20K
HDR1
HDR2
CD DISPLAY
OPTIONAL
TCXO/OXO
ACCURATE CLOCK
OSC CAN
U4
EXT FREQ STD
XTAL
U1 16FXXX
U2
74HC132
FREQUENCY
COUNTER
10K
1K
CAL
PN2222
1000
4148
150
680
CRYSTAL OSCILLATOR
HC49
INFO @ www.QRPme.com
POWER ACTIVE
STATUS
1M
820K
.1uf
.047uf
510
2N3904
120K
SIGNAL
CONDITIONING
SIGNAL
EXTERNAL
IN=OSC
OUT
EXT
1.5uf
X-CHECKer
XTAL OSC/FREQ COUNTER
VER.8
DESIGNED by WA2REX @ QRPme